KIMMS™

INDUSTRIAL EQUIPMENTS LLP

FRESHNESS ENGINEERED TO PERFECTION

INDUSTRIAL EQUIPMENTS LLP

kimmsindustrialequipments.com

KIMMS
INDUSTRIAL EQUIPMENTS LLP

Welcome to KIMMS

INDUSTRIAL EQUIPMENTS LLP

Where innovation meets reliability! We are a dynamic leader in the trading and manufacturing of top-tier industrial equipment tailored to meet the diverse needs of our clients.

With a robust range of products including Washer-Extractors, Driers, Dishwashers, Calendaring Machines (Roll Heated and Chest Heated), Vacuum Ironing Tables with Boilers, Dry Cleaning Machines, Folding Machines, and allied services, we are your go-to partner in enhancing operational efficiency and productivity.

OUR VISION

To be the leading provider of innovative industrial cleaning solutions, empowering businesses to achieve maximum efficiency and productivity while maintaining the highest standards of quality.

OUR MISSION

We aim to deliver cutting-edge technology and exceptional service that not only meets but exceeds our customers' expectations. Our commitment to quality and excellence is reflected in our ISO 9001-2015 certification, CE certified - Make in India, ensuring that our processes and products adhere to the highest international standards.

WHY CHOOSE US?

Diverse Product Range

Our wide range of industrial equipment tailored to diverse needs

Quality Assurance

Our ISO 9001:2015 certification ensures consistent quality, reliability, & peace of mind. CE certified

Innovative Solutions

We invest in R&D to deliver the latest industrial cleaning innovations, keeping you ahead in the market.

Exceptional Support

Expert team delivering tailored support for smooth, efficient operations.

OUR **PRODUCTS**

Washer-Extractors

Engineered for efficiency, our machines deliver superior cleaning performance while minimizing water and energy consumption.

Vacuum Ironing Tables with Boilers

Our ironing solutions combine vacuum technology with steam generation, making ironing faster and more effective.

Dryers

Our advanced drying systems guarantee quick and effective drying, ensuring your linens and garments are ready for immediate use.

Dry Cleaning Machines

Experience cutting-edge drycleaning technology that ensures garments are treated with the utmost care, extending their lifespan.

Dishwashers

Designed for high-volume operations, our dishwashers provide thorough cleaning with fast turnaround times, enhancing productivity in your establishment.

Folding Machines

Our folding machines optimize space and time, providing consistent and precise folding for various fabrics.

Calendring Machines

Available in Roll Heated and Chest Heated variants, these machines are perfect for achieving the perfect finish on textiles.

Allied Services

Beyond our products, we offer comprehensive services to support your equipment & operations, ensuring seamless integration and exceptional performance.

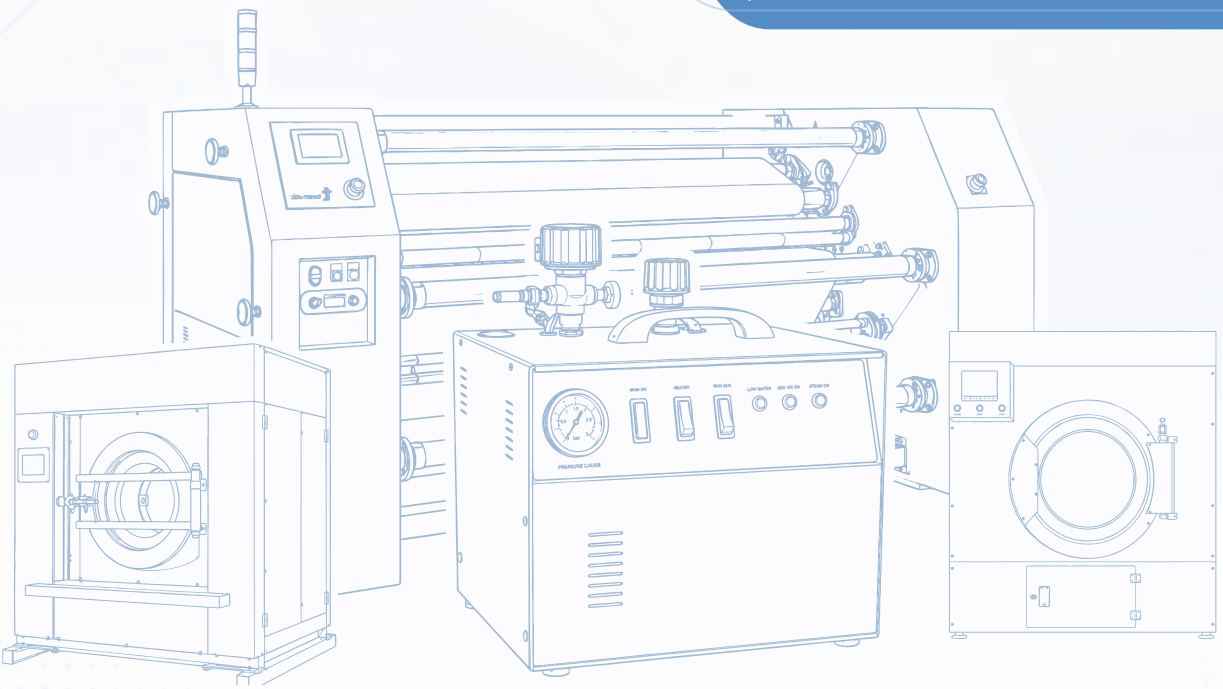

Washer Extractor

Large-Screen

Large-screen programmable computer controlling system, with touch screen, manual/automatic, medium/high extraction, independent operation, be programmed in temperature, water level and washing time.

Automatic Multi-Compartment Detergent Dosing System

Equipped with automatic multi-compartment detergent dosing system, with 3-5 automatic detergent (solid and liquid) compartments, high-speed water flowing detergents into drum.

5 automatic detergent boxes, integrated forming, acid and alkali resistant, high temperature resistance. Quick flush, no detergent powder sediments left.

High Quality

Automatic soft-mount washer and extractor equipped with variable frequency Inverter, easy detachable fully cover structure easy for maintenance, does not demand installation foundation on ground, EU- Designed Structure-Technologies conjoined bearings ensuring stability in high-speed extraction.

Narrowing sink design saving water.

Components

Adopting main components from advanced and exquisite brands and company, ensuring safety and reliable duration.

Fully Automatic Computer Control Design

24/30 sets of programmable automatic programs and multiple sets of standard programs, a user-friendly operation interface, a large screen LCD display, stable operation, and convenient maintenance.

Front door seal ring is made of premium sealing material, integrated forming, no seam, more reliable and durable.

Exclusive adjustable lower spring damping system can absorb over 95% shock. Linens moisture content rate is less than 65%. Soft mounted, bring great convenience to users.

Washer Extractor

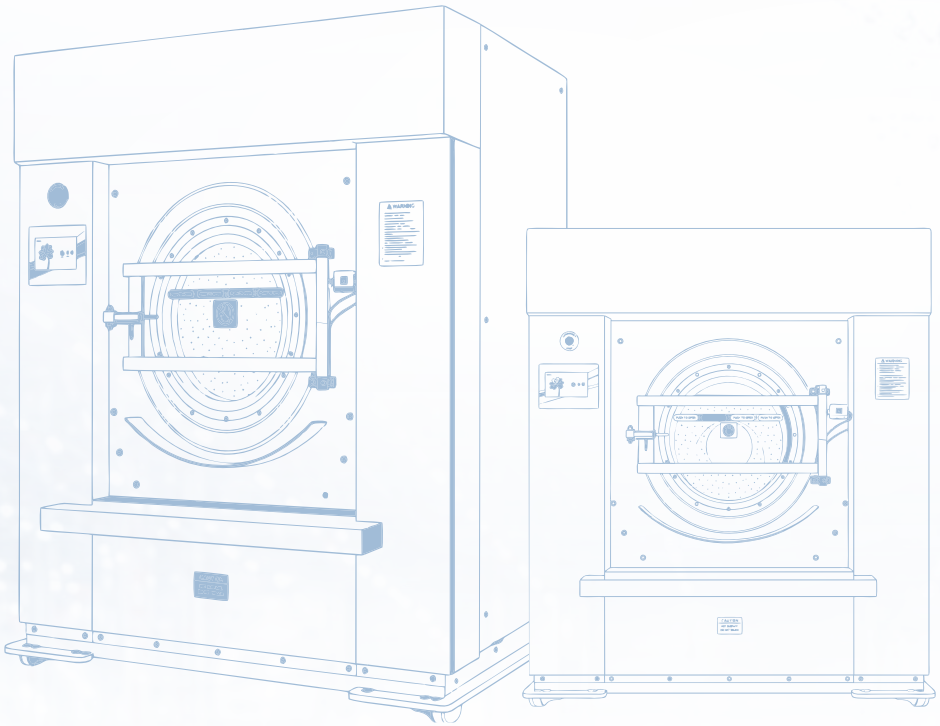

PARAMETERS KWE

MODEL	KWE-20	KWE-30	KWEI-30	KWE-50	KWE-60	KWE-100	KWE-130	KWE-150
VOLUME	200	300	305	505	602	1000	1300	1500
LOADING WEIGHT (kg)	20	30	30	50	60	100	130	150
WASH SPEED (r/min)	28-40	28-40	28-40	28-40	28-40	28-40	28-40	28-40
HIGH-EXTRACTING SPEED (r/min)	900	900	850	740	790	680	650	620
G FORCE	350	350	350	350	350	350	350	300
POWER MOTOR (kw)	2.5	3.5	5.5	5.5	5.5-7.5	7.5	11	15
ELECTRIC HEATING POWER (kw)	18	18	18	27-36	27-36	60	-	-
WEIGHT (kg)	380	495	900	2250	2500	3200	3900	4900
DIAMETER OF BASKET(mm)	750	750	900	970	970	1200	1300	1470
DEPTH OF BASKET(mm)	410	620	545	680	815	888	980	880
DIMENSIONS HEIGHT(mm)	1570	1570	1700	1960	1970	2000	2018	2215
DIMENSIONS WIDTH(mm)	1025	1025	1250	1520	1540	1750	2060	2320
DIMENSIONS LENGTH(mm)	1015	1225	1325	2250	1780	3200	2330	2375

Tumble Dryers

Professional Computer Controlling System

LCD/Microprocessor display screen. Easy Operating. Smart-start cooling state by pre-set temperature automatically, after drying processing completed, reach best dry effectiveness on linen. Scientific design achieves best balance in temperature, air flow, and drum space, offering most energy effectiveness in drying.

More Efficient Saving Energy

Adopting Large-scale heating device; increasing heat dissipation areas, speed up drying process.

New generation deflector with enhanced heat insulation, minimizing energy losses. fitting but focus on its presetting ones.

Advance & Safe Design

Equipped with wider ventilation holes in the drum, maximizing most hot air flowing between linen. Improve dry efficiency, Large-Diameter front door, easy for linen loading and unloading, Match loading height with principles of ergonomics, dramatic reducing labouring, Adopting Draw-type fluff collector, make cleaning much convenient, Equipped with door safety control device, when the loading door opened in operating, able to make emergency stop.

Hot Air to Cold Automatically

Shifting from hot air to cold automatically when drying processing completed, reducing linen temperature soon, Meanwhile avoid temperature shifting but Focus on its presetting ones.

Controller

A program controller system standard with this machine. comes with per set 5 program.

Optional

7inch touch screen PLC with 10 programs

Tumble
Dryers Ktd

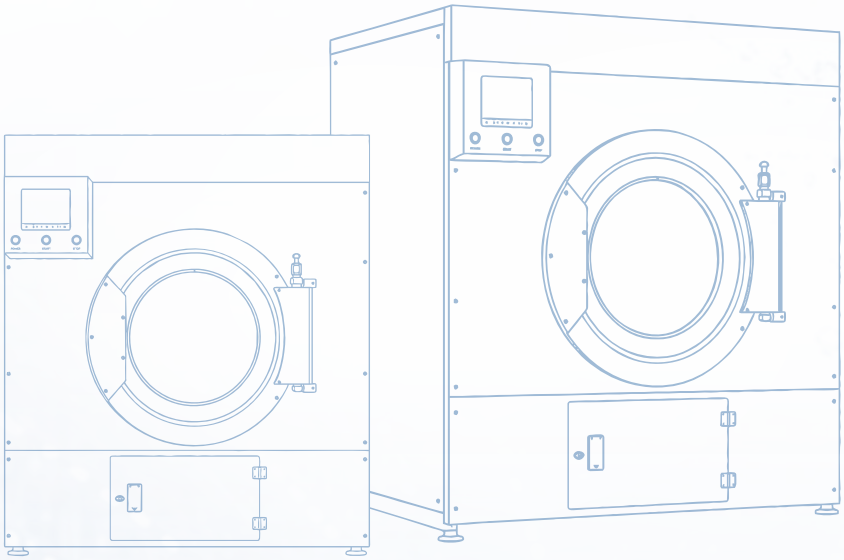

PARAMETERS KTD

MODEL	KTD 15	KTD 30	KTD 50	KTD 60	KTD 100
DRYING CAPACITY(KG)	15	30	50	60	100
DRUM VOLUME(L)	290	615	1054	1220	2015
DRY SPEED (rpm/min)	34	34	34	34	34
ELECTRICAL HEATING (KW)	9KW/12KW	18KW/24KW	27KW/30KW	27KW/36KW	80KW
DRIVE MOTOR (KW)	0.35	0.75	1.1	1.5	2.2
EXHAUST MOTOR SIZE (KW)	0.5	0.75	2.2	1.5	1.5*2
DOOR OPENING DIA (mm)	480	800	-	800	-
WEIGHT(Kg)	380	575	650	880	980
DIMENSIONS	-	-	-	-	-
DRUM DIAMETER (mm)	700	970	1140	1220	1450
DRUM DEPTH (mm)	700	830	1070	1050	1220
CABINET HEIGHT (mm)	1500	1850	2220	2150	2510
CABINET WIDTH (mm)	825	1030	1220	1350	1620
CABINET LENGTH (mm)	1250	1300	1650	1980	1870

Flatwork Ironer Steam Heating

- Big rollers and important small rollers are made of stainless steel.
  Big roller's diameter is Φ800, roller thickness is 4mm.
- Frequency controllable by famous DELTA inverter. Sprocket drive overlap technology makes transmission speed difference more accurate and reasonable. Machine operation smoother.
- Load discharging bearing seat can eliminate the extra load caused by big roller's thermal expansion. It not only protects bearing but also against machine deformation.
- Unit design makes the upgrading easier, lower the upgrading cost.
- With the experience of more than a decade, wrapping angle reaches a perfect condition, ironing effect is fast and good.
- Special extended linen roller can avoid electrostatic adsorption.
- Special treatment on the surface of big rollers for better ironing quality. Patent number: 201621081502.2
- The combination of high-power motor and high-torque reducer ensures the power output of the ironing machine at high speed.

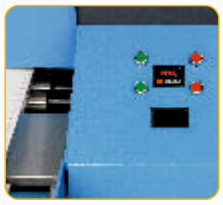

- Tailor-made operation system, easy to operate.

- Clear pressure display.

- The combination of high-grade frequency conversion motor and worm gear reducer has fast running speed, large transmission torque, stable operation and low maintenance cost.

- Reversal switch to get the stuck linen out.

- Ironing belts can adjust the tightness by itself according to linen thickness, energy supply and the belts themselves, to increase the ironing quality.

- Load discharging bearing seat can eliminate the extra load, extending service life.

PARAMETERS KFWI

TYPE / PARAMETER	UNIT	KFWI-2500G	KFWI-2800G	KFWI-3000G	KFWI-2800G	KFWI-3000G	KFWI-3300G
BIG ROLLER NUMBER	–	1	1	1	2	2	2
ROLLER DIAMETER	mm	Φ800	Φ800	Φ800	Φ800	Φ800	Φ800
MAX IRONING WIDTH	mm	2500	2800	3000	2800	300	3300
MAX IRONING SPEED	m/min	9	9	9	14	14	14
MAX TEMPERATURE	°C	160	160	160	160	160	160
MOTOR POWER	kW	0.55	0.55	0.55	1.1	1.1	1.1
STEAM PRESSURE	MPa	0.4–0.6	0.4–0.6	0.4–0.6	0.4–0.6	0.4–0.6	0.4–0.6
STEAM PIPE	Inch	G3/2"	G3/2"	G3/2"	G3/2"	G3/2"	G3/2"
DRAIN PIPE	Inch	G1"	G1"	G1"	G1"	G1"	G1"
DIMENSIONS							
WIDTH	mm	3580	3880	4080	3880	4080	4380
DEPTH	mm	1670	1670	1670	2620	2620	2620
HEIGHT	mm	1360	1360	1360	1360	1360	1360
WEIGHT	kg	1350	1450	1500	2700	2800	2900

TYPE / PARAMETER	UNIT	KYZIII-3000G	KYZIII-3300G	KYZIV-3000G	KYZIV-3300G	KYZV-3000G	KYZV-3300G
BIG ROLLER NUMBER	–	3	3	4	4	5	5
BROLLER DIAMETER	mm	Φ800	Φ800	Φ800	Φ800	Φ800	Φ800
MAX IRONING WIDTH	mm	3000	3300	3000	3300	3000	3300
MAX IRONING SPEED	m/min	19	19	24	24	29	29
MAX IRONING TEMPERATURE	°C	160	160	160	160	160	160
MOTOR POWER	kW	1.5	1.5	3	3	4	14
STEAM PRESSURE	MPa	0.4–0.6	0.4–0.6	0.4–0.6	0.4–0.6	0.4–0.6	0.4–0.6
STEAM PIPE	Inch	G3/2"	G3/2"	G3/2"	G3/2"	G3/2"	G3/2"
DRAIN PIPE	Inch	G1"	G1"	G1"	G1"	G1"	G1"
DIMENSIONS							
WIDTH	mm	4080	4380	4080	4380	4080	4380
DEPTH	mm	3570	3570	4520	4520	5470	5470
HEIGHT	mm	1360	1360	1360	1360	1360	1360
WEIGHT	kg	3750	4000	5050	5300	6100	6450

Flatwork Ironer Gas Heating

- Big rollers and important small rollers are made of stainless steel. Big roller diameter is Φ800.
- Adopts metal mesh group infrared burner with full combustion and two-stage heating technology, maintaining ironing temperature in an optimal range. Infrared gas ironer patent number: 201320542652.9
- Safety features include automatic temperature control, auto ignition, flame monitoring, flame-out protection, alarm system, forced draft, and indoor ventilation. All measures ensure safe operation.
- Economical operation: one tank of liquefied gas (15 kg) can iron up to 200 kg of linen. Estimated cost per kg is 0.8 yuan.
- Stainless steel rollers have a smooth surface, short preheating time, excellent heat transfer, and are rust-proof.
- Frequency controlled by DELTA inverter. Sprocket drive overlap technology ensures accurate transmission speed and smooth machine operation.
- One end of big rollers is supported by a wheel structure, providing strong carrying capacity and stability. Thermal expansion deformation is minimized, protecting bearings and machine structure.
- Unit design allows easier upgrades and reduces upgrading costs.
- Special extended linen roller supports direct connection with folder and helps avoid electrostatic adsorption.
- Combination of high-power motor and high-torque reducer ensures strong power output at high operating speed.

Supporting operation system, easy operation, clear display.

Strong ventilation system, prevents safe production from exhaust and pollution.

Ironing belts can adjust the tightness by itself according to linen thickness, energy supply, and belts themselves, to increase the ironing quality.

The combination of high-grade frequency conversion motor and worm gear reducer has fast running speed, large transmission torque, stable operation, and low maintenance cost.

Special infrared heating roller, using primary energy, energy saving and high efficiency.

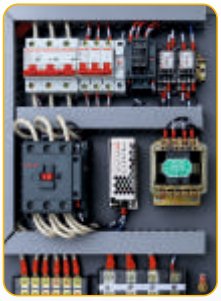

Standard wiring connection, wiring tube number clearly matches with the number on the drawing, easy to do troubleshooting and maintenance.

PARAMETERS KFWI

MODELS / PARAMETER	UNIT	KYQI-3000	KYQII-3000	KYQII-3300	KYQIII-3300	KYQIV-3300
BIG ROLLER NUMBER	—	1	2	2	3	4
ROLLER DIAMETER	mm	Φ800	Φ800	Φ800	Φ800	Φ800
MAX IRONING WIDTH	mm	3000	3000	3300	3300	3300
MAX IRONING SPEED	m/min	7	13	13	18	25
MAX IRONING TEMPERATURE		170	170	170	170	170
GAS PRESSURE	kPa	8–10	8–10	8–10	8–10	8-10
GAS CONSUMPTION (natural gas)	m^3/h	6–9	12–18	12–18	20–30	30-40
MOTOR POWER	kW	0.55	0.75	0.75	1.5	2.2
VENTILATION POWER	kW	1.5	3.0	3.0	4.5	6.0
GAS PIPE	Inch	G1/2"	G1"	G1"	G1"	G1.5"
DIMENSIONS						
WIDTH	mm	4080	4080	4380	4380	4380
DEPTH	mm	1670	2620	2620	3570	4520
HEIGHT	mm	1940	1940	1940	1940	1940
WEIGHT	kg	1650	3100	3300	4100	5450

Flatwork Ironer Electric Heating

- Big rollers and important small rollers are made of stainless steel. Big roller diameter is Φ800.
- Stainless steel heater electric heating tube, fast heating, high heat transmission efficiency, long service life.
- Frequency controllable by famous DELTA inverter. Sprocket drive overlap technology makes transmission speed difference more accurate and reasonable. Machine operation smoother.
- Load discharging bearing seat can eliminate the extra load caused by big roller's thermal expansion. It not only protects bearing but also prevents machine deformation.
- Unit design makes upgrading easier and lowers upgrading cost.
- With more than a decade of experience, wrapping angle reaches a perfect condition, ensuring fast and effective ironing performance.
- Special extended linen roller as supporting parts can connect directly with the folder and also avoid electrostatic adsorption.

- Supporting operation system, easy operation, clear display.

- The combination of high-grade frequency conversion motor and worm gear reducer has fast running speed, large transmission torque, stable operation, and low maintenance cost.

Frequency inverter with linkage control, perfectly matches conveyor and folder.

Stainless steel heater tubes, fast heating, high heat transmission efficiency, long service life.

Ironing belts can adjust the tightness by itself according to linen thickness, energy supply, and belts themselves, to increase the ironing quality.

Standard wiring connection, wiring tube number clearly matches with the number on the drawing, easy to do troubleshooting and maintenance.

PARAMETERS KFWI

TYPE / PARAMETER	UNIT	KYDI-2800G	KYDI-3000G	KYDII-2800G	KYDII-3000G	KYDIII-3000G	KYDIII-3300G
BIG ROLLER NUMBER	–	1	1	1	2	3	3
BIG ROLLER DIAMETER	mm	Φ800	Φ800	Φ800	Φ800	Φ800	Φ800
MAX IRONING WIDTH	mm	2800	3000	2800	3000	3000	3300
MAX IRONING SPEED	m/min	6	6	10	10	14	14
MAX IRONING TEMPERATURE	℃	200	200	200	200	200	200
MOTOR POWER	kW	0.55	0.55	0.75	0.75	1.5	1.5
ELECTRIC HEATING POWER	kW	36	39.6	72	79.2	118.8	126.9
DIMENSIONS							
WIDTH	mm	3880	4080	3880	4080	4080	4380
DEPTH	mm	1670	1670	2620	2620	3570	3570
HEIGHT	mm	1360	1360	1360	1360	1360	1360
WEIGHT	kg	1500	1600	2900	3100	4150	4450

Full Auto Folding Machine & Stackers

- Big LCD touch screen with Mitsubishi PLC controller, intelligent operation system.
  Control interface available in Chinese and English, dynamically displays folding conditions for process control.
- Two independent drive motors controlled by inverter with stepless speed regulation.
  Folding speed up to 50 m/min, compatible with various types of ironing machines.
- 2 horizontal folds and 3 cross folds. The first two use air knives, and the latter three are mechanical.
- Equipped with an effective static electricity elimination rod to remove static from linens,
  preventing issues like rolling or wrinkling and improving folding success rate.
- High-quality pneumatic system ensures fast and reliable folding actions with high accuracy.
- Inverter and braking device ensure motion accuracy.
- Built-in self-diagnosis function and safety protection system for convenient daily use and maintenance.
- Selectable function allows linens to be delivered after ironing without needing folding on the working table.
- Touch screen can rotate 180° for user-friendly operation.

- Combination of professional-level PLC and touch screen with man-machine interaction.
  Simple and reliable operation.

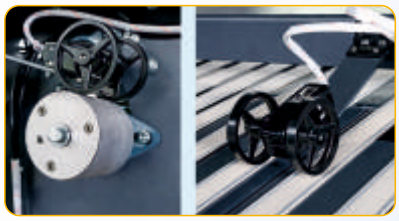

- Professional millimeter-scale length & velocity measurement to guarantee of folding accuracy.

- Quick flap opening by means of a cylinder, Folded linen drops onto the conveyor. After reaching the preset pieces, linens are sent out by conveyor.
- Cylinder directly drives the flap, ensuring a simple structure and reduced malfunction.
- Conveyor is driven by motor rollers, delivery length is programmable.

PARAMETERS KFMS

FOLDER / PARAMETERS	UNIT	KZD - 3300V
MAX FOLDING LENGTH × WIDTH	mm	3300 × 3300
MAX FOLDING TIMES	-	5/32
FOLDING SPEED	m/min	10–50 (Frequency Control)
POWER	V/P/Hz	380/3/50
COMPRESSED AIR PRESSURE	MPa	0.5–0.8
COMPRESSED AIR CONSUMPTION	m^3/min	0.2
COMPRESSED AIR JOINT	mm	Φ16
INSTALLATION WATT	kW	2.05
DIMENSIONS		
WIDTH	mm	4290
DEPTH	mm	2970
HEIGHT	mm	1750
WEIGHT	kg	1600

STACKER / PARAMETERS	UNIT	KZD - 3300S
MAX STACK WIDTH	mm	800
MAX STACK HEIGHT	mm	300
MAX STACK SIZE	mm	500x800
SPEED	m/min	60
MOTOR POWER	kW	0.25
POWER SUPPLY	V/P/Hz	380/3/50
COMPRESSED AIR PRESSURE	MPa	0.5~0.8
COMPRESSED AIR JOINT	mm	Φ8
DIMENSIONS		
WIDTH	mm	3350
DEPTH	mm	800
HEIGHT	mm	990
WEIGHT	kg	280

VACUUM IRONING TABLE

- Flat top suction ironing table with optional swivel arm with buck for ironing of specific parts of the garment
- Ironing table with 3 height adjustable levels
- Tray to hold finished garments

PARAMETERS KVIT

MODEL	Description	Working Size (mm)	Width (mm)	Depth (mm)	Height (mm)	Working Area Height (mm)	Vacuum Motor (hp)	Estimated Net Weight Appro (Kg)
KVIT 130x80	KIMMS Vacuum Ironing Table	1300×800	1500	920	1380	780	0.75	98

Portable Boiler

Special Features

- Wide range with various capacities and options
- Specially designed safety mechanism
- Blow down system
- Compact, reliable and easy to use
- Electro polished stainless steel heater element
- Protected by thermostats and level controllers
- High pressure water feed pump
- Pump is protected with feed water tank probe sensor system to avoid any failure due to dryness

PARAMETERS KIE-EB

MODEL	Heater Capacity (kW)	Steam Output (Kg/hr)	Operating Pressure (Bar)	Water Inlet (inch)	Steam Outlet (inch)	Suitable for Number of Irons	Blow Down Outlet (inch)	Water Pump (hp)	Total Connected Load (kW)	Dimensions WxDxH (mm)	Estimated Net Weight (Kg)
KIE-EB03	3	4	3	0.5	0.25	1	0.25	NA	3	370x400x550	20
KIE-EB06	6	8	3.5	0.5	0.5	2	0.5	1	6.75	360x500x740	56
KIE-EB12	12	16	3.5	0.5	0.5	4	1	1	12.75	350x740x890	83
KIE-EB18	18	24	3.5	0.5	0.5	6	1	1	18.75	400x740x890	95
KIE-EB27	27	36	3.5	0.5	0.5	10-12	1	1	27.75	750x950x950	152

Finishing Equipment

Garment Finisher

Spotting Table

Collar & Cuff Press Machine

Dry Cleaning Automatic Press Machine

Laundry Automatic PressMachine

Mashroom Press Machine

Spare Parts

We want to be recognised by our back-up support for spares,
nation wide after-sales service, and customer-friendly service through a qualified team.
It will be our constant endeavour not only to upgrade technology but also to enhance the quality of service offered.

SOME OF OUR EXISTING CLIENTS

MACLEODS PHARMACEUTICALS LTD

KIMMS™
INDUSTRIAL EQUIPMENTS LLP

+91 94803 95720 / +91 99000 11769 / +91 89281 81091 kimmsindustrialequipments.com

kimmsindlequipments@gmail.com / contact@kimmsindustrialequipments.com

Sy.No.79, Ashok Leyland Road, Sai Nagara, Neralur Village, Attibele Hobli, Anekal Taluk, Bangalore - 562107